ESCO
LIFESCIENCES



Model: OxAP

Operational Excellence Aseptic Platform Isolator (OxAP)



OxAP

Operational Excellence Aseptic Platform Isolator

A controlled Grade A environment for aseptic processing and sterile product handling, separating the critical work zone from operators and the room to support your contamination control strategy and EU GMP Annex 1 compliance.



1 Front air inlets & H14 HEPA

Supply and exhaust filters rated 99.995% at MPPS per EN 1822.

2 15-inch Allen-Bradley HMI

Centralized PLC control and monitoring with data logging and PDF cycle reports.

3 Integrated glove leak tester

Checks glove and port integrity in place, so breaches are caught before they reach the batch.

4 Four-glove main chamber

1900 mm wide Grade A / ISO Class 5 work zone with unidirectional airflow.

5 Heavy-gauge SS316L chamber

3.0 mm stainless steel, fully welded joints and coved corners; ± 0.8 Ra finish.

AT A GLANCE

Grade A	6-log	+40 Pa	< 5% / h
ISO Class 5 main chamber environment	Microbial reduction design target for NHP cycles	Positive main-chamber pressure (± 5 Pa)	Automated pressure-hold test before every cycle

Shown: Ox-AP-4G-P-B, transter chambers botn sides

APPLICATIONS

- Aseptic processing
- Aseptic filling
- Cell processing
- Aseptic material transfer
- Sterility testing

CONFIGURATIONS • ALL POSITIVE PRESSURE

OX-AP-4G-P-L	Transfer chamber, left
OX-AP-4G-P-R	Transfer chamber, right
OX-AP-4G-P-B	Transfer ch ambers, both sides



6 **Catalytic converter coverage**

Treats every chamber exhaust and the recirculation loop, lowering H_2O_2 exposure risk.

7 **Integrated NHP bio-decontamination**

Nebulized hydrogen peroxide reaches main and transfer chambers; designed for 6-log reduction.

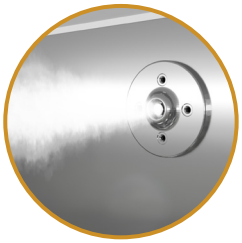

Close-up: the nebulizer nozzle releases a fine hydrogen peroxide mist across the chamber

8 **Transfer chamber with inflatable seals**

Runs its own bio-decontamination cycle between transfers; inflatable seals on all doors.

9 **Rear wall racking & hanging bar**

Integrated mounting points for process access and full bio-decontamination exposure.

KEY SPECIFICATIONS

Main chamber, internal (W × D × H)	1900 x 720 × 795 mm	Transfer chamber, internal	609 x 524 x 828 mm
Airflow, main / transfer	Unidirectional / turbulent	Downflow velocity	0.45 m/s ± 20%
Construction	3.0 mm SS316L inside, SS304 outside	Doors	16 mm tempered glass
Controls	Allen-Bradley CompactLogix 5380 PLC	Power / air	208-240 VAC 1Ø; 6.2-12 bar(g)

Options: particle counters, air samplers, glove leak testers, RTP

Request a quote • escopharma.com

OPERATIONAL EXCELLENCE ASEPTIC PLATFORM ISOLATOR

The Esco Operational Excellence Aseptic Platform (OxAP) is designed to support EU GMP Annex 1 compliance, helping manufacturers control contamination risks and protect sterile products during aseptic processing. Its controlled Grade A environment allows operators to handle products through glove ports, while dedicated transfer chambers enable materials to enter and leave without exposing the main working area directly to the surrounding room.

Integrated bio-decontamination and automated chamber integrity testing support consistent preparation before operation and help manufacturers implement their contamination control strategy. Centralized controls help operators monitor and manage the process, while a choice of one or two transfer chambers accommodates different material flows and facility layouts.



Model: OxAP

Applications

Aseptic processing

Aseptic filling

Cell processing

Aseptic material transfer

MAIN FEATURES



HEPA Filter



Nebulizer



Sliding Glass Door



HMI Touchscreen Controller



Viable / Non-viable Air Sampler



Rear Wall Rracket & IV Bar Provision

Features	Description
Integrated NHP bio-decontamination	The integrated Nebulized Hydrogen Peroxide (NHP) system is designed to achieve a 6-log microbial reduction. Fine aerosol distribution supports effective coverage throughout the main and transfer chambers while enabling faster bio-decontamination cycle times.
Heavy-gauge chamber construction	The work chamber is constructed from 3.0 mm SS316L stainless steel with fully welded joints and coved internal corners, providing enhanced durability and ease of cleaning.
Rear wall racking and hanging bar	Integrated rear-wall mounting points and a hanging bar allow items to be securely arranged for convenient process access and effective bio-decontamination exposure.
Space-saving sliding internal door	The sliding door between the main and transfer chambers minimizes intrusion into the working area compared with a conventional hinged door, helping maximize usable chamber space.
Integrated controls and records	The 15-inch Allen-Bradley HMI and PLC provide centralized system operation and monitoring, with data logging and PDF cycle-report capabilities.
Catalytic converter coverage	Catalytic converters treat air from every chamber exhaust and the main-chamber recirculation loop reducing hydrogen peroxide concentration to lower exposure risk during aeration and normal operation.
Four-glove main chamber	Four glove ports provide operators with access across the 1900 mm-wide isolator chamber. A separate transfer chamber without glove ports supports material transfer while maintaining containment between the isolator chamber and the surrounding room.

ENGINEERING DRAWING

Operational Excellence Aseptic Platform Isolator

Top View

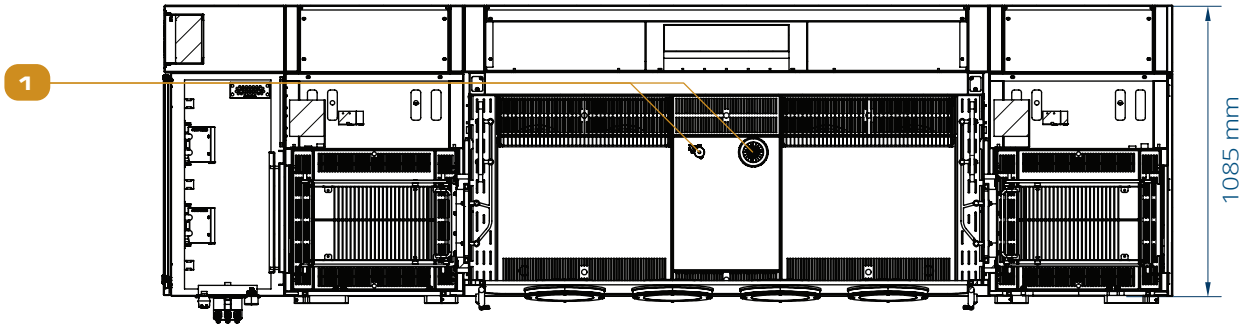

Front View

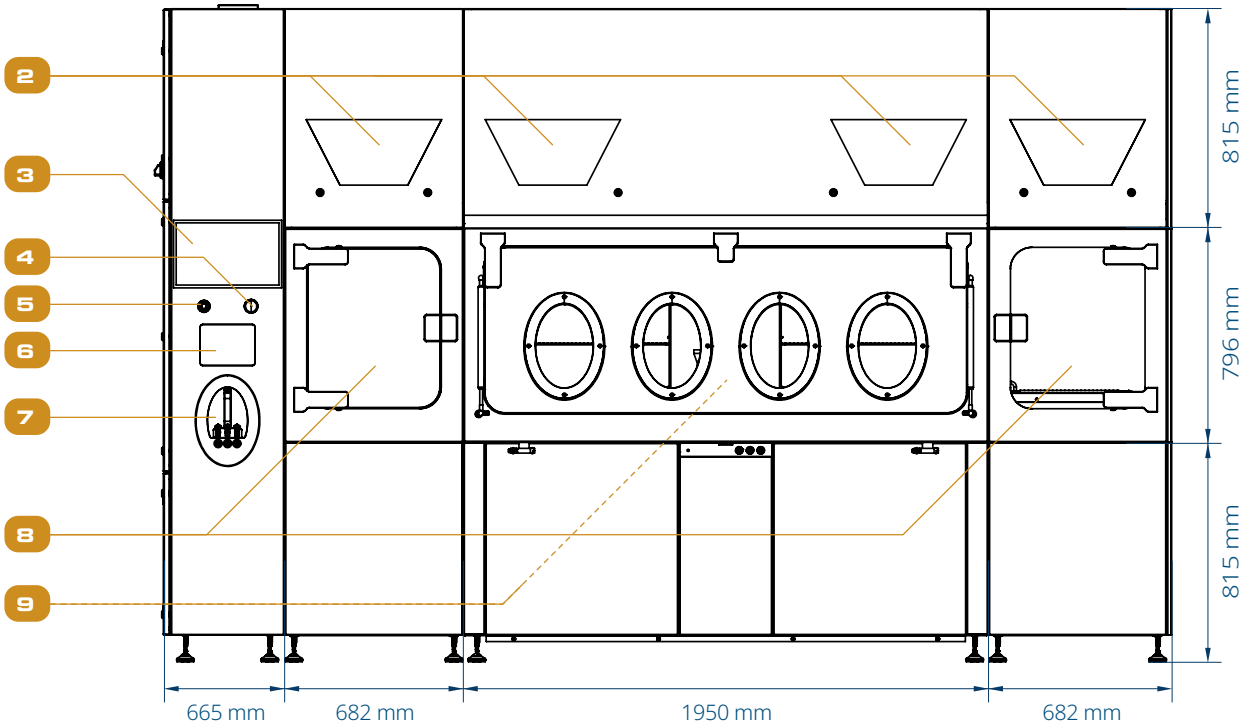

Left Side View

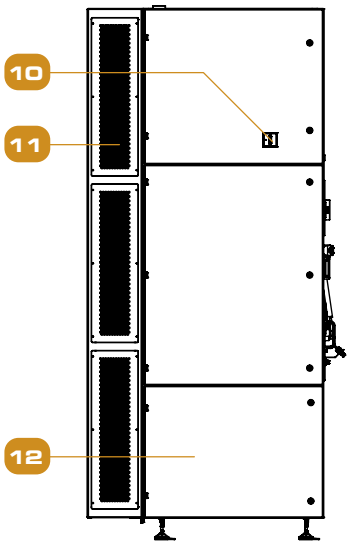

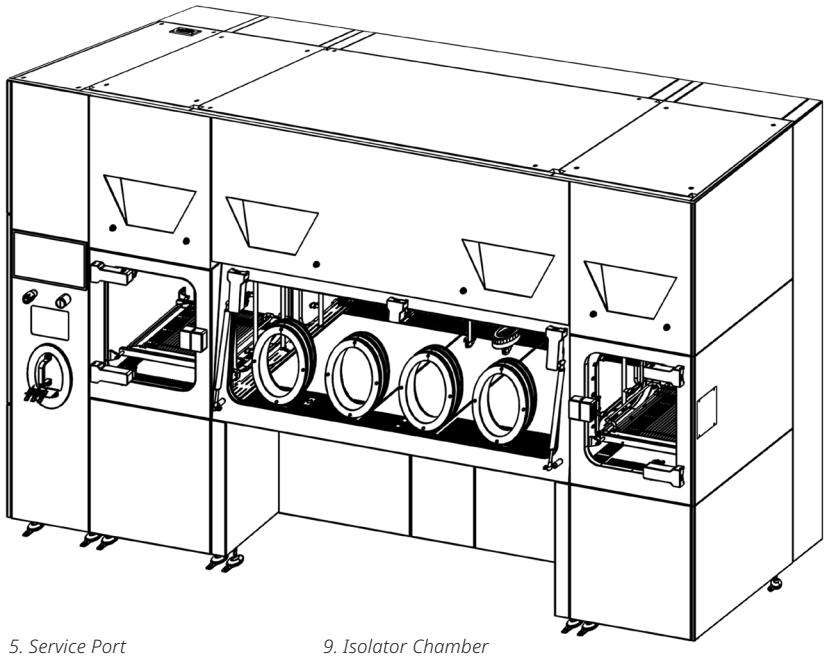

1. *Particle Monitoring Probe Locations*
2. *Air Intake Grills*
3. *HMI Controller*
4. *Status Indicator Light*
5. *Service Port*
6. *Unit Nameplate*
7. *Integrated Glove Leak Tester*
8. *Transfer Chambers*
9. *Isolator Chamber*
10. *Lockout Switch*
11. *Exhaust Grill*
12. *H_2O_2 Decontamination System Access*

GENERAL SPECIFICATIONS

Operational Excellence Aseptic Platform Isolator

			4-Glove Isolator Chamber	Transfer Chamber (Optional to have 1 or 2 TC)
External Dimensions (W x D x H)*			1950 x 830 x 815 mm	665 x 548 x 896 mm
Process Chamber Internal Dimension (W x D x H)			1900 x 720 x 795 mm	609 x 524 x 828 mm
Isolator Construction	Internal Chamber		3.0 mm Stainless steel 316L	
	External Chamber		3.0 mm Stainless steel 304	
	Outer Doors		16 mm Tempered Glass	
	Inner Doors		16 mm Tempered Glass	
Airflow Regime			Unidirectional Airflow	Turbulent Airflow
			Recirculating	Single Pass
Pressure			Positive 40 ± 5 Pa	Positive 20 ± 5 Pa
Filtration	Supply	Filter Type	HEPA (H14) with Gasket Seal and Integral Mesh Guard	
		Filter Efficiency	99.995% at Most Penetrating Particle Size (MPPS) as per EN1822:2009	
	Exhaust	Filter Type	HEPA (H14) with Gasket Seal and Integral Mesh Guard	
		Filter Efficiency	99.995% at Most Penetrating Particle Size (MPPS) as per EN1822:2009	
Downflow Velocity			0.45 m/s +/-20%	
Sound Level			≤ 80 dBA	
Chamber Lighting			≥ 600 Lux	
Biodecontamination			Nebulized Biodecontamination System	
Pressure Hold Test	Automated Daily Routine		<5% chamber volume per hour (prior to each decontamination)	
Electrical Requirement			208-240 VAC, 50/60 Hz, 1Ø	
Compressed Air Requirement			Min 6.2 Bar-g, max 12 Bar-g with min 1000 Liter per Minute Flow	
Isolator Surface Finish	Internal Chamber		≤ 0.4 Ra	
HMI Type			Allen Bradley Optix 15"	
Control System			Allen Bradley CompactLogix 5380 PLC	

4-Glove Isolator Chamber		
Operating Mode	**Chamber**	**Exhaust Flow Volume**
Single Pass	Transfer Chamber	~520 cmh
Recirculating	Isolator Chamber	~595 cmh

AIRFLOW DIAGRAM

Controlled airflow and dedicated material transfer chambers help protect the aseptic working environment during processing and material handling.

Air enters through the upper front inlets and passes through inlet filters and supply fans, then flows downward through supply filters into the chambers. It is drawn beneath the chamber grilles and through exhaust filtration and catalytic treatment. The isolator-chamber section shows partial air recirculation; the transfer-chamber section shows a fully exhausted airflow path. Exhaust air is discharged through the side of the unit. Positive pressure helps prevent the ingress of contaminants from the surrounding room.

Transfer Chamber

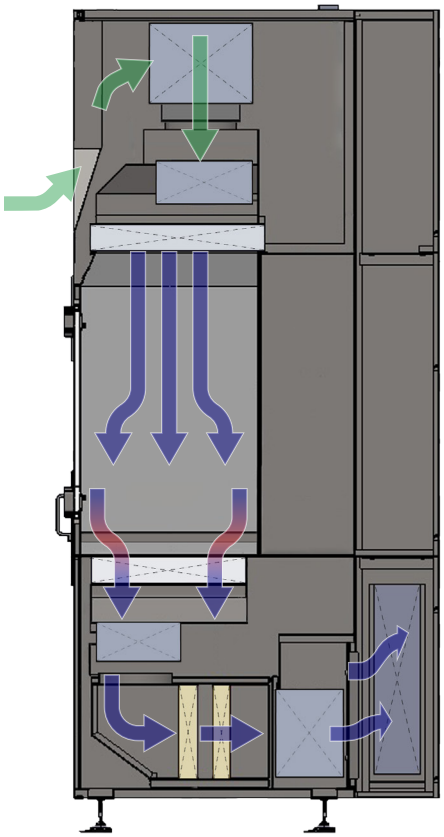

Isolator Chamber

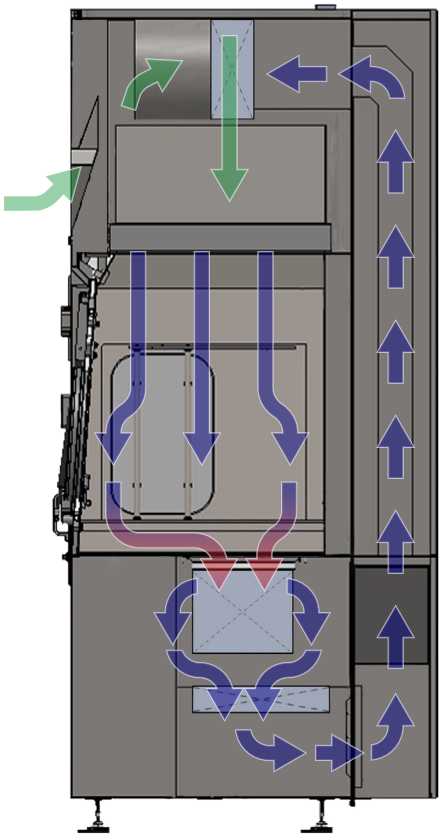

Room air / Inflow air

Unfiltered / potentially contaminated air

HEPA-filtered air

CONTROLLED MATERIAL TRANSFER

When in operation, materials enter and exit the isolator exclusively through dedicated transfer chambers, ensuring the main chamber is never directly exposed to the room environment and the Grade A / ISO Class 5 integrity is maintained throughout operation.

Materials are loaded onto an integrated sliding tray inside the transfer chamber. Once the outer door is closed and sealed, the transfer chamber completes its bio-decontamination cycle before the inner door interlock releases. The tray then extends into the main chamber, bringing materials within comfortable operator reach to minimize reach distance and reduce glove fatigue. Material removal follows the applicable transfer-out sequence. Interlocked doors prevent the inner and outer doors from opening simultaneously, eliminating a direct air path between the room and the main chamber.

The system provides two bio-decontamination modes: Master Decontamination and Transfer Chamber Decontamination. Main chamber bio-decontamination is performed as part of the Master Decontamination cycle; a separate, independent main chamber cycle is not available. Transfer Chamber Decontamination allows material transfers to be managed without requiring a full Master Decontamination cycle for each transfer. All cycles are independently validated, documented, and traceable.

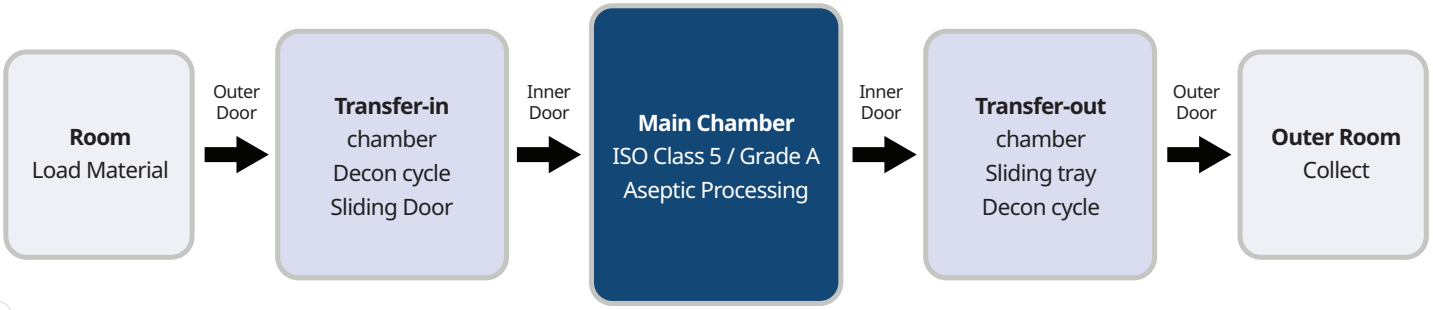

Options	Non-viable Particle Counter		
	Viable Air Sampler		
	Sterility Test Pump		Mechanical Integration of Sterility Test Pump includes a manual quick-disconnect fitting with an internal spring loaded shutoff drain valve, cable access, and a test pump cut-out.
	Integrated Glove Leak Tester		
	Wireless Glove Leak Tester		
	Rapid Transfer Port (RTP)	RTP Ø105/190/270– Alpha	Available for the single-transfer-chamber (1TC) configuration only, replacing the outlet transfer chamber.
		RTP Ø105/190/270– Beta Canister	
		RTP Ø105/190/270– Beta Line	
	Customized Racking		May be offered upon request, subject to confirmation. Standard racking is included.

Guide to Operational Excellence Unit Models

OX-AP-4G-P-B

Isolator Unit	Model		Number of Gloves		Pressure		Transfer Chamber	
Operational Excellence	ST	Sterility Testing	4	4 Gloves	P	Positive	L	Left
	AP	Aseptic Processing					R	Right
							B	Left and Right

Pressure specification

P: Isolator chamber +40 ± 5 Pa; transfer chamber +20 ± 5 Pa.

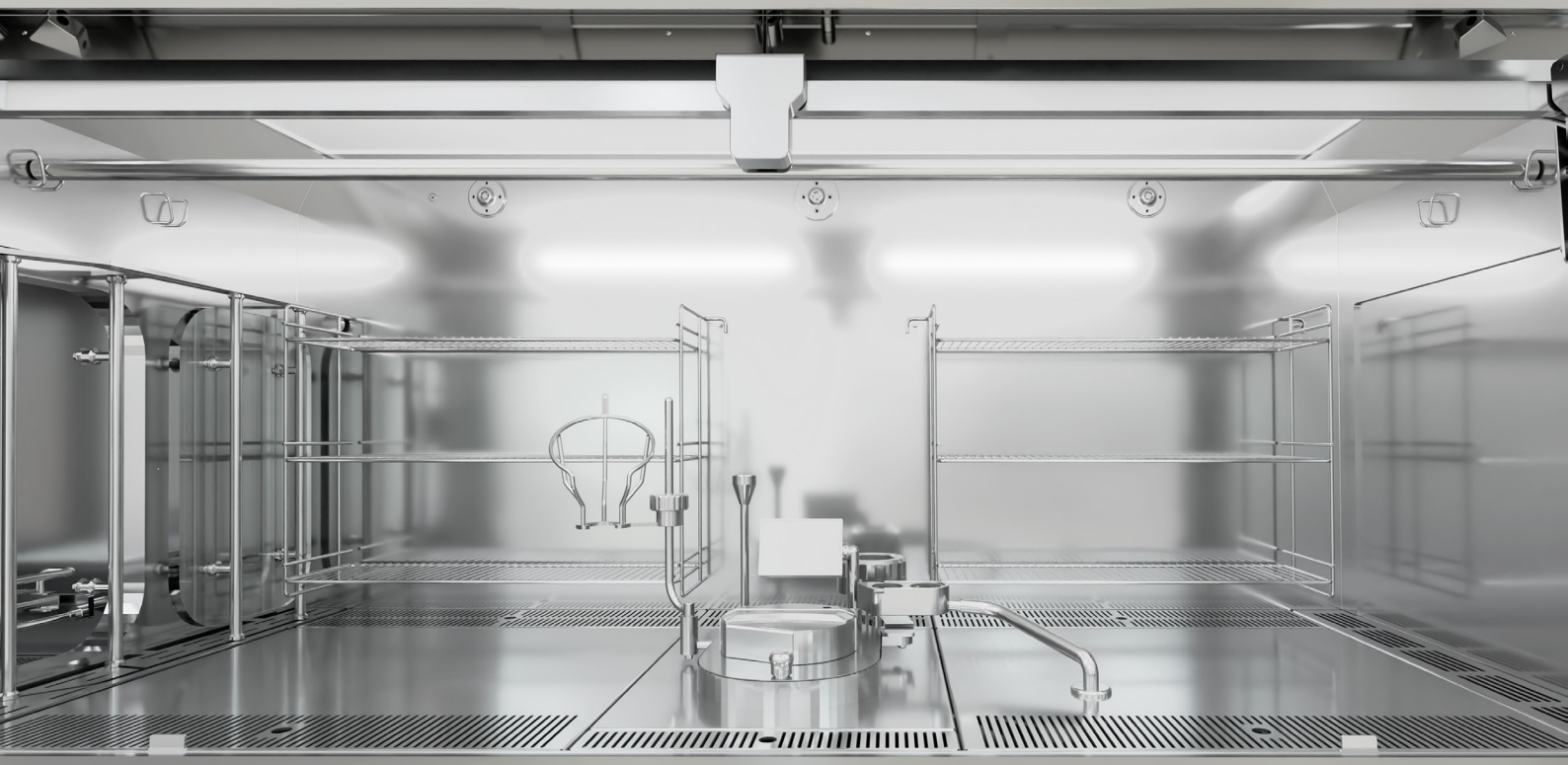

Ox PLATFORM NHP TECHNOLOGY OVERVIEW

Nebulized Hydrogen Peroxide (NHP) on the Ox platform

Fast, compact bio-decontamination, no compressed air, no heated vaporizer.

The Ox platform uses nebulized hydrogen peroxide (NHP) to bio-decontaminate the isolator chamber, its load and exposed equipment surfaces. A piezoelectric vibrating mesh turns liquid hydrogen peroxide into a fine dry fog at ambient temperature. The fog evaporates rapidly and distributes through the chamber, where hydrogen peroxide vapor acts on exposed surfaces. A catalytic aeration phase then removes residual peroxide before aseptic operations resume.

NHP is an aerosolized hydrogen peroxide process, a recognized category of vapor-phase hydrogen peroxide (VPHP) bio-decontamination for pharmaceutical isolators.

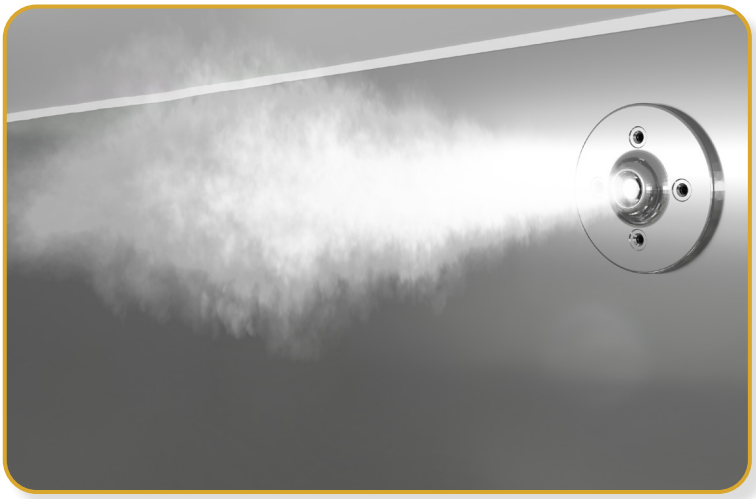

How it works

1. Solution supply — Liquid hydrogen peroxide is fed to the nebulizer head.
2. Mesh vibration — A piezoelectric element vibrates a micro-perforated mesh at ultrasonic frequency.
3. Aerosol generation — Liquid is extruded through the perforations as uniform micro-droplets.
4. Dry fog — Calibrated micro-droplets under 10 µm form a fine dry fog.
5. Distribution — The fog evaporates and hydrogen peroxide vapor diffuses throughout the enclosure.
6. Surface exposure — Hydrogen peroxide vapor contacts and adsorbs onto exposed surfaces.
7. Microbial inactivation — Hydrogen peroxide inactivates microorganisms during the exposure phase.
8. Aeration — Residual hydrogen peroxide is removed to a safe level before operations resume.

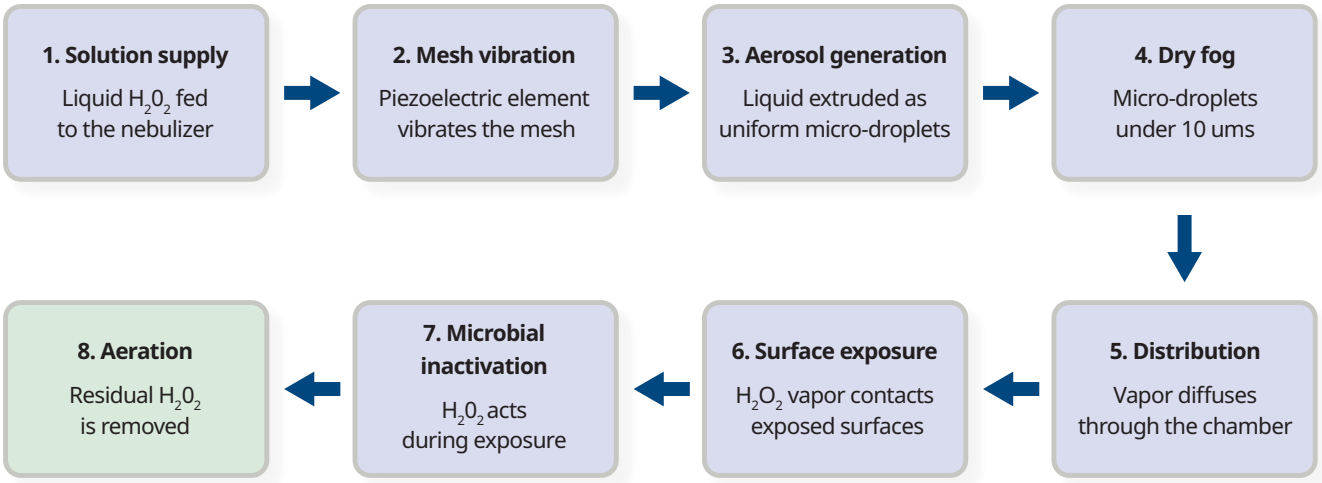

Key benefitst

- Simpler utilities. No compressed air and no heated vaporizer at the nebulizer, reducing utility connections and heat load in the chamber.
- Compact integration. The low-pressure nebulizer head fits inside the isolator envelope with minimal footprint.
- Fast turnaround. A complete bio-decontamination cycle in under 30 minutes for a 1.352 m^3 chamber under empty load, getting you back to aseptic operations sooner.
- Fine, uniform aerosol. Monodispersed micro-droplets evaporate quickly, limiting wetting of surfaces.
- Verified dose every cycle. Each cycle records the mass of hydrogen peroxide delivered, giving a traceable dose record alongside time, temperature and humidity.

Proven efficacy: 6-log reduction

NHP cycles on the Ox platform are developed and validated to achieve a minimum 6-log reduction of bacterial spores.

Efficacy is demonstrated with biological indicators carrying at least 10^6 Geobacillus stearothermophilus spores. Indicators are placed throughout the isolator, including the locations hardest to reach. After exposure and incubation, no growth across repeated validation runs demonstrates the 6-log reduction for that cycle and load configuration.

Chemical and enzyme indicators support distribution mapping and rapid cycle optimization during development.

Validation support

Every isolator, load and process is different, so every cycle is proven for its application. Esco supports the full cycle-development program in line with current industry guidance:

- Chemical-indicator distribution mapping, including shadowed and hard-to-reach locations
- Worst-case biological-indicator location studies to set injection and exposure parameters with a safety margin
- Aeration development to the required end point, typically ≤1 ppm
- Documentation to support qualification under EU GMP Annex 1

Technical summary

Parameter	Value
Technology	Piezoelectric vibrating-mesh nebulization
Aerosol type	Dry fog, calibrated micro-droplets <10 µm
Hydrogen peroxide concentration	35%
Nebulizer utilities	Electrical only; no compressed air, no heater
Efficacy target	≥6-log reduction, G. stearothermophilus BI $\geq 10^6$
Typical cycle time	<30mins, 1.352 m^3, empty load
Aeration end point	≤1 ppm (lower on request)
Recorded cycle data	Time, temperature, RH, H_2O_2 delivered



ESCO GLOBAL NETWORK

42 Locations in 24 Countries All Over the World

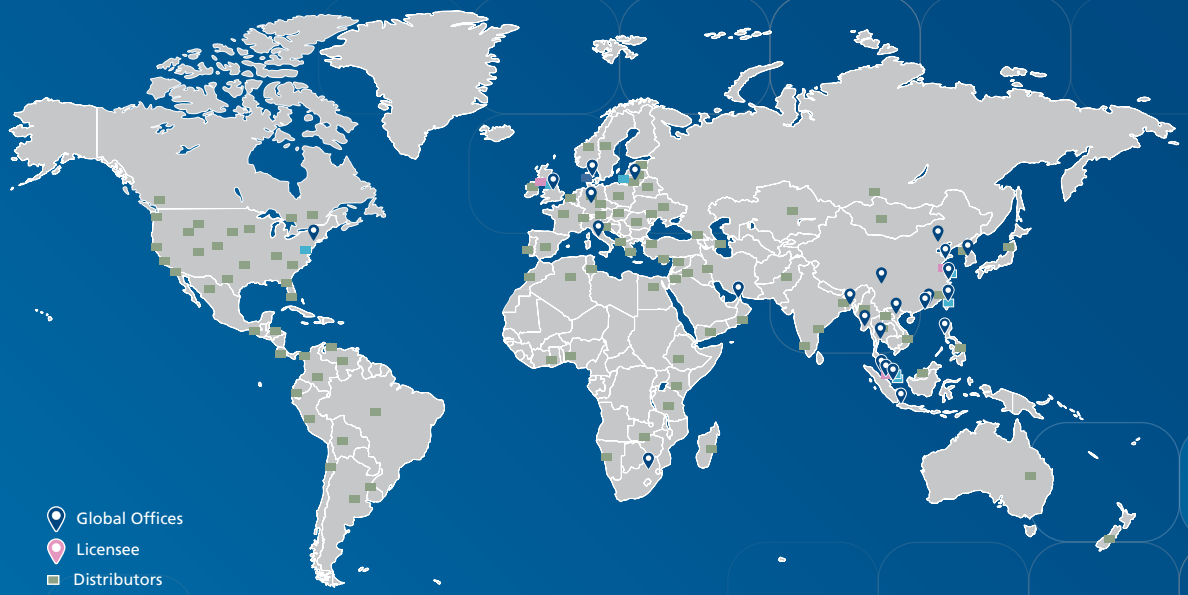



Air Shower
Ceiling Laminar Airflow Units
Cleanroom Transfer Hatch
Containment Barrier Isolator (CBI)
Downflow Booth (DFB)
Dynamic Floor Laminar Hatch
Dynamic Pass Box
General Processing Platform Isolator (GPPI)
Laminar Flow Trolley
Operational Excellence Aseptic Platform Isolator (OxAP)
Operational Excellence Sterility Testing Isolator (OxST)
Pass Box
Ventilated Balance Enclosure (VBE)
Weighing and Dispensing Containment Isolator (WDCI)

Since 1978, Esco has emerged as a leader in the development of controlled environment, laboratory and pharmaceutical equipment solutions. Products sold in more than 100 countries include biological safety cabinets, fume hoods, ductless fume hoods, laminar flow clean benches, animal containment workstations, cytotoxic cabinets, hospital pharmacy isolators, and PCR cabinets and instrumentation. With the most extensive product line in the industry, Esco has passed more tests, in more languages, for more certifications, throughout more countries than any biosafety cabinet manufacturer in the world. Esco remains dedicated to delivering innovative solutions for the clinical, life science, research and industrial laboratory community.

ESCO® LIFESCIENCES

Esco Micro Pte. Ltd.
19 Changi South Street 1,
Singapore 486779
Tel: +65 65420833
Email: csis.pharma@escolifesciences.com

Esco Technologies, Inc.
2512 Metropolitan Drive, Suite 120 B
Feasterville- Trevose, PA 19053-6738
Tel: +1 215 322 2155
Email: eti.pharma@escolifesciences.com

Esco GB Ltd
Unit 2 R-evolution @ Gateway 36, Kestrel Way, Barnsley, S70 5SZ
Tel: +44 (0) 1226 360 799
Email: egb.info@escolifesciences.com

Esco Lifesciences Offices: Bangladesh | China | Denmark | Germany | Hong Kong | Indonesia | Italy | Lithuania | Malaysia | Myanmar | Philippines | Russia | Singapore | South Africa | South Korea | Taiwan | Thailand | UAE | UK | USA | Vietnam

9010729_Operational Excellence Aseptic Platform Isolator (OxAP) Brochure_A4_vA_110226
Esco can accept no responsibility for possible errors in catalogues, brochures and other printed materials.
Esco reserves the right to alter its products and specifications without notice. All trademarks and logotypes in this material are the property of Esco and the respective companies.