ESCO®
LIFESCIENCES

Containment Barrier Isolator (CBI)

Your Practical Solution to cGMP Compliance

Containment Barrier Isolator (CBI) facilitates the isolation of a product or process while providing the required conditions for a sterile/aseptic and hazardous environment. This equipment provides a comprehensive range of personnel and product protection in addition to protection for the surrounding work areas and the environment.

CBI is available in 3 models to provide the needs of different applications and industries.

- Containment Barrier Isolator - Unidirectional
- Containment Barrier Isolator - Turbulent
- Containment Barrier Isolator – III (Class III Biosafety Cabinet)

CBI-U

CBI-T

CBI-III

Standard Features

- Full stainless-steel isolator with SS 304 exterior and fully welded SS316L internal chambers with rounded coved corners
- Self-contained design of control systems and electrics allowing simple plug-in installation
- Safe change glove system allows the changing of gloves while maintaining aseptic conditions inside the chambers
- HEPA (H14) filters with a typical efficiency of ≥ 99.995% at 0.1 to 0.3 microns provide superior ISO Class 5 air cleanliness
- Pressure-tested Class 2 as per ISO 10648-2 standard
- HMI/PLC controller supervises all functions and monitors airflow and pressures in real-time
- Ergonomically angled front and circular glove ports (minimal crevices, no exposed bolts and nuts) improve reach and comfort
- The pass-through chamber ensures work zone remains sterile during insertion and removal of items
- The electromagnetic interlocking door mechanism with time-delayed ingress/egress control allows sufficient time to minimize transfer of contamination
- FDA-approved static seals
- Foot switch provides hands-free access to opening of the magnetic interlock, minimizing operator fatigue during transfer procedures
- Sliding tray facilitates material transfer without the operator having to reach into the pass chamber interchange area
- Can be integrated with multiple equipment to ensure ease of workflow

Control System

The Intuitive HMI control system supervises operation of all cabinet functions. Controls are configured to support the unit operation to meet user requirements.

Features of the HMI/PLC include:

- Work zone and pass-through chamber pressured are displayed, monitored and recorded.
- Continuous monitoring and display of alarm status

Fan Safety

The CBI fan system is designed for maximum energy efficiency and minimal maintenance.

- Centrifugal, direct-drive, external rotor motors reduce operating costs.
- Esco motor/fan orientations minimize noise and vibration.

Warranty

One year warranty (excluding consumables). Consumables are gloves, ballast, fluorescent, and filters. The warranty will cover all other parts including the blower, fan switch, and electrical main board. During the period of warranty, any repair, modification, testing and commissioning performed by any unauthorized party other than Esco Service Team will void the warranty of the unit.

Containment Barrier Isolator – Unidirectional (CBI-U)

Models Available:

- Positive Pressure or Negative Pressure
- Recirculating or Total Exhaust/Single-Pass
- 2,3, or 4 gloves

Common Applications: Pharmacy compounding (Chemo-therapy/TPN), cell processing, aseptic processing, sterility testing, medical device manufacturing, radiopharmacy, cosmeceutical, nutraceutical, food and beverage application, research and development.

Standard Compliance: ISO 10648-2:1994, EN ISO 14644-1:2015, USP <797>/<800>, GMP, PIC/S, CETA CAG-001-2005, CETA CAG-002-2006

Containment Barrier Isolator – Turbulent (CBI-T)

Models Available:

- Negative Pressure only
- Total Exhaust/Single-Pass
- 2,3, or 4 gloves

Common Applications: Potent powder handling, HPAPI QC Testing, and research and development

Standard Compliance: ISO 10648-2, GMP, PIC/S

Containment Barrier Isolator – Class III (CBI-III)

Models Available:

- Negative Pressure only
- Total Exhaust/Single-Pass
- 2, 3, or 4 gloves

Common Applications: Biosafety Levels 1 to 4 handling, virus production, vaccine production

Standard Compliance: EN 12469:2000, NSF/ANSI 49-2016, ISO 14644-1:2015, USP <797>/<800>, GMP, PIC/S.

Intuitive HMI/PLC

- Supervises all functions and monitors cabinet performance in real time
- HMI display to illustrate isolator operating parameters

Damper

- Inbuilt dampers to allow pressure testing without having to use cover plates, tape & silicone
- Close or open the isolator chambers from the external room environment
- Upgradable for actuated inlet and exhaust damper for automated pressure decay test

Relative Humidity and Temperature Sensor

- Monitors relative humidity and temperature of the chambers
- Formed in a single unit with only one measuring probe installed at the chamber work area

Magnetic Interlock

- Ensures safety and containment between the Pass Chamber and the Process Chamber
- Time delay effect from closing one door before opening the opposite door

Process Chamber

- Perform work operation. Environmental conditions are being monitored, regulated and maintained.
- Chamber supply and return H14 HEPA filters compliant with EN 1822, providing 99.995% efficiency at the most penetrating particle size (MPPS).
- ISO Class 5 facilitating aseptic processing in an EU GMP grade A condition

Foot Switch

- Provides hands-free access to opening of the magnetic interlock minimizing operator fatigue

Guide to Containment Barrier Isolator (CBI)

Isolator Unit	Model		Process Chamber Design		Number of Pass-Through Chamber (PTC)	
CBI	U	Unidirectional	2G	2-glove (1200 mm)	1	1 PTC (Left or Right)
	T	Turbulent	3G	3-glove (1600 mm)	2	Both Sides (Left and Right)
	III	Class III BSC	4G	4-glove (2000 mm)		

Emergency Stop Button (E-Stop)

- Easy access for manual electrical power turn off and equipment shutdown during emergencies

Tempered Glass

- Toughened safety glass for increased protection
- Frameless with highly polished rounded edges to increase cleanliness and maximize door vision panel for ergonomic comfort

Sliding Tray

- Prevents operator fatigue during transfer procedures
- Removable, for easy cleaning

Pass Chamber

- Gateway for materials entering and exiting the Process chamber
- Furnished with electromagnetic interlocked doors

Clean Design Work Area

- Coved corner for easy cleaning
- Constructed with non-corrosive 316L stainless steel

Standard Compliance

Design	Cabinet Performance	Air Cleanliness	Electrical Safety
USP <797> and <800>, USA NIOSH, OSHA, Designed in compliance to international GMP standards	Class 2 Leak Tight Containment as per ISO 10648-2, CETA CAG-002-2006	ISO 14644-1 Class 5, EU GMP Grade A, Worldwide, JIS B9920, Class 3, Japan BS 5295, Class 1, UK	IEC 61010-1, Worldwide EN 61010-1, Europe UL 61010-1, USA CAN/CSA-22.2, No. 61010-1

CBI-U

Containment Barrier Isolator - Unidirectional

Introduction

CBI-U utilizes unidirectional/laminar airflow and facilitates the isolation of a product or process while providing the required conditions (ISO Class 5/Grade A Environment) for a sterile/aseptic environment. This equipment provides a comprehensive range of personnel and product protection in addition to protection for the surrounding work areas and the environment.

It is factory-configured to operate at positive or negative pressure in single pass or recirculating airflow. The type of application dictates the operating parameters (pressure/airflow) of the CBI-U.

Applications

- Pharmacy Compounding (Chemotherapy/TPN)
- Small-scale Potent Material Handling
- Aseptic Processing
- Sterility Testing
- Research and Development
- Cell Processing

Key Features

- Laminar / Unidirectional airflow that complies to standards for sterile product handling
- HEPA (H14) filters with a typical efficiency of ≥ 99.995% at 0.1 to 0.3 microns provide superior ISO Class 5 air cleanliness (Grade A)
- Recovery Time to maintain ISO Class 5 environment is less than 60 seconds
- Class II Containment as per ISO 10648-2 leak tightness

Standard Compliance

- USP <797> and USP <800>
- FDA cGMP and EU GMP
- Class 2 Pressure-tested as per ISO 10648-2
- Air Quality: ISO Class 5 (BS EN ISO 14644-1) and EC GMP Grade A
- H14 filters: HEPA as per EN 1822 and ULPA as per IEST-RP-CC001.3

CBI-U AIRFLOW PATTERN

- Ambient air is pulled through the inlet prefilter located on top of the isolator. Air from the top inlet and from work zone is pulled by the fan which creates a positive pressure on the plenum that creates downflow.
- The HEPA (H14) downflow filter creates a laminar and particle-free ISO Class 5 air cleanliness as per ISO 14644-1 inside the isolator to protect the work material inside the main chamber and pass-through.
- Air from the work zone and pass-thru is quickly purged out by the fan to keep the area clean. The fan pulls approximately 70% of the purged air back to the plenum and after passing through the HEPA (H14) downflow filter. The high rate of airflow recirculation helps to prolong filter life and reduces the chances of ambient contaminants entering the work zone.
- For a recirculating model, approximately 30% of the purged air is exhausted through an HEPA-filter to prevent heat build-up inside the isolator that can be detrimental to drug compounding. This exhausted air is replenished by ambient air coming from the top inlet prefilter and a filter with 80% efficiency for positive pressure model.
- For a Total Exhaust/Single-Pass Model, 100% of the air is exhausted out of the isolator.

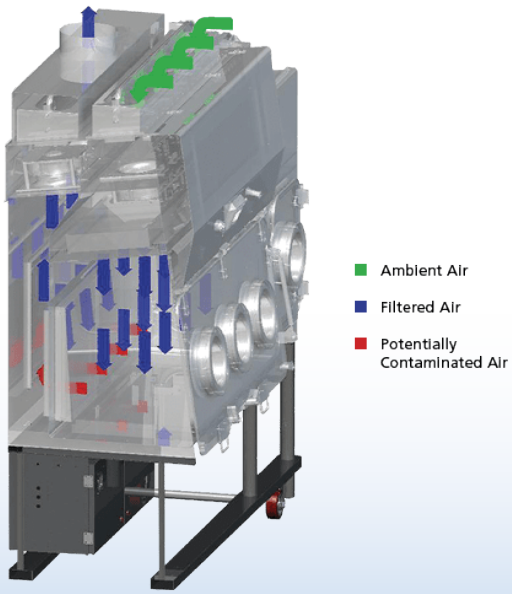

General Specifications Containment Barrier Isolator - Unidirectional		CBI-U-2G	CBI-U-3G	CBI-U-4G
External dimension of Process Chamber *		1200 x 920 x 2650 mm	1600 x 920 x 2650 mm	2000 x 920 x 2650 mm
Internal dimension of Process Chamber		1196 x 560 x 765 mm	1596 x 560 x 765 mm	1996 x 560 x 765 mm
External dimension of 1-glove Pass Chamber		610 x 780 x 1325 mm		
Internal dimension of Pass chamber		606 x 450 x 700 mm		
Glove port height **		1135 mm		
Glove port dimension		Circular (200 x 200 mm) Note: Oval (200 x 300 mm) is available as optional		
Chamber Environment		ISO Class 5 in Process Chamber (Grade A)		
Chamber Pressure		Factory-Configured Either Positive or Negative Pressure		
Airflow Type		Unidirectional/ Laminar Airflow Factory-Configured Recirculating or Single-Pass/Total Exhaust Model		
Filter Type - Chamber Inlet		HEPA (H14) Filter with Integral Mesh Guard and Gasket Seal		
Filter Efficiency - Chamber Inlet		> 99.995% at Most Penetrating Particle Size (MPPS) as per EN 1822:2009		
HMI Type		HMI Siemens/ Allen Bradley 7” Note: Industrial PC upgrade is available as optional		
Control System		Industrial Grade PLC Siemens/ Allen Bradley		
Lighting Level		≥ 500 Lux (6000 K)		
Sound level		≤ 80 dBA		
Isolator Construction	Internal Chamber	SS316L		
	Service Housings	SS304		
	Support Frame	SS304		
	Control Panel	In-house SS304 (IP-20)		
	Chamber Door	10 mm (0.39”) Tempered Glass		
Isolator Surface Finish	Internal Chamber	≤ 0.4 Ra		
	External Chamber	≤ 0.6 Ra		
Electrical Requirement		220-240 VAC, 50/60 Hz, 1Ø or 110-120 VAC, 50/60 Hz, 1Ø Note: 3Ø is available upon request		
Compressed Air Requirement		Min 6 Bar-g, max 12 Bar-g with 200 Liter per Minute Flow		
Exhaust Duct Requirements (by Client) unless Integral Catalytic Convertor is Included		250 mm (10”) Duct from Isolator to Outside		
Estimated Weight		850 kg	1000 kg	1200 kg
Shipping Dimension (W x D x H)		TBD	TBD	TBD

* Including exhaust collar for ducting and fixed stand with caster wheels and leveling feet

** With fixed stand with caster wheels and leveling feet

Building Exhaust Requirement	CBI-U-2G	CBI-U-3G	CBI-U-4G
Total exhaust (Single Pass) with 1PTC	750 cmh	1100 cmh	1500 cmh
Recirculating	150 cmh	220 cmh	300 cmh

Note: The values stated above are based on standard building exhaust requirements with a ±30% tolerance and may vary for customized dimensions or specific airflow configurations. Please contact Esco to confirm the exact building exhaust requirements for the proposed or selected configuration.

Engineering Drawing
Containment Barrier Isolator - Unidirectional

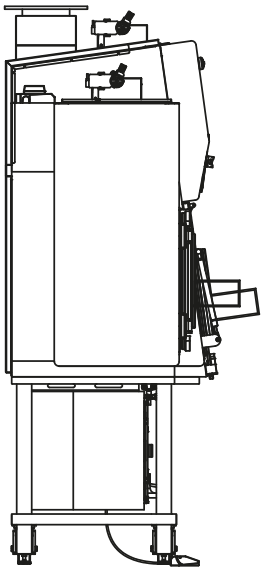

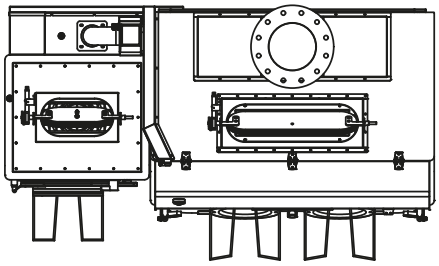

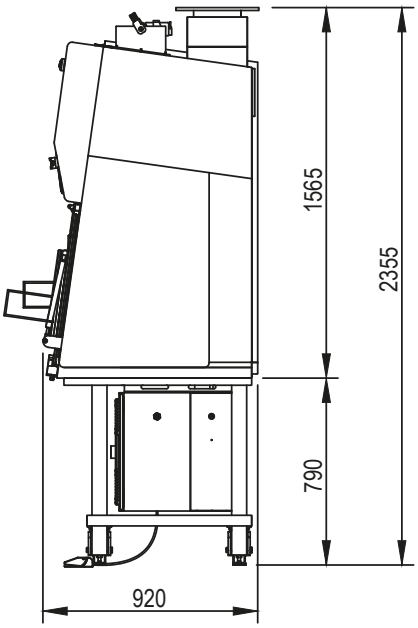

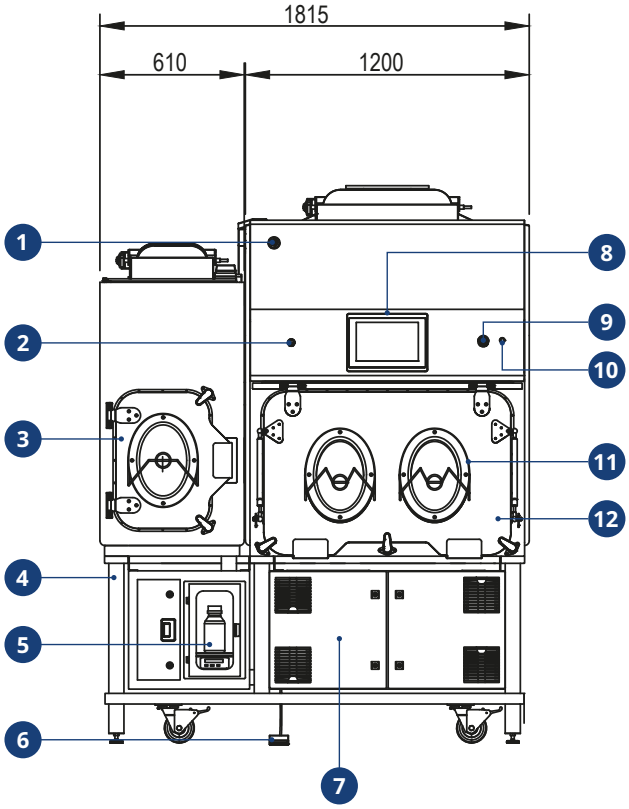

1. Visual & Audible Alarm Buzzer
2. USB Port for HMI Servicing and Data Connection
3. Pass Chamber Outer Glass Door with Static Seal
4. Fixed Stand with Leveling Feet and Lockable Caster Wheels
5. H_20_2 Sterilant Bottle (500 ml) Compartment with Weighing Scale (Optional)
6. Foot switch for Inner Door
7. Main Control Panel (MCP)
8. HMI 12”, Allen Bradley (Optional)*
9. Emergency Stop Button
10. Emergency Stop Reset Button
11. Oval Glove Ports (Optional)**
12. Process Chamber Main Glass Door with Static Seal

*** The HMI 7” as a standard for CBI**

**** The standard glove ports for CBI are circular glove ports**

Engineering Drawing
Containment Barrier Isolator - Unidirectional

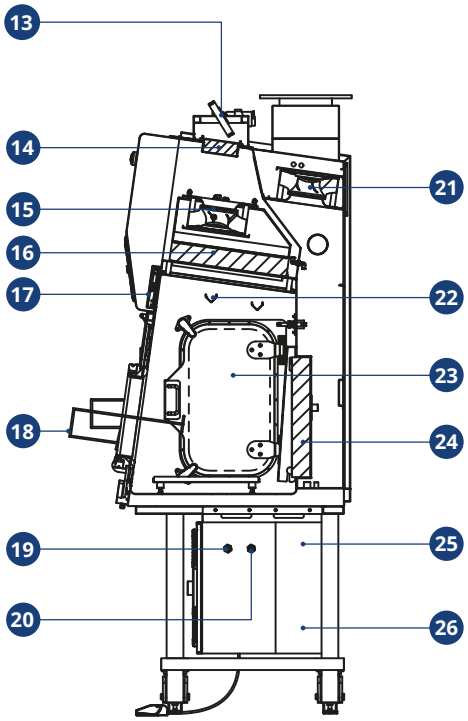

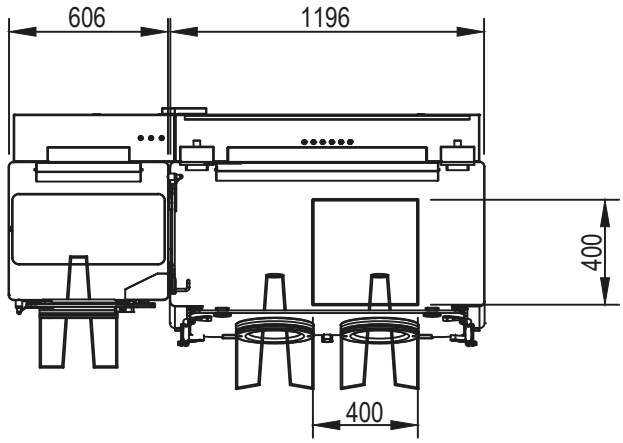

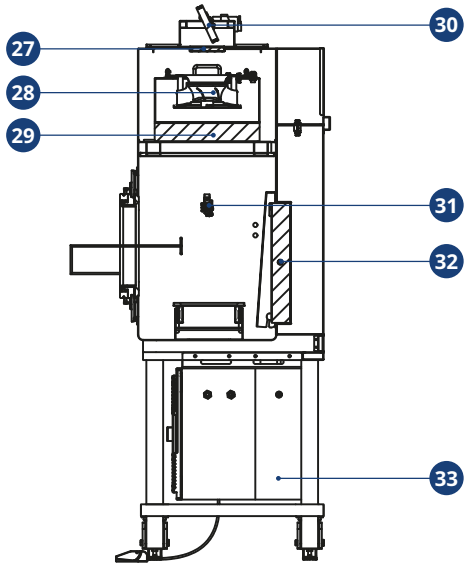

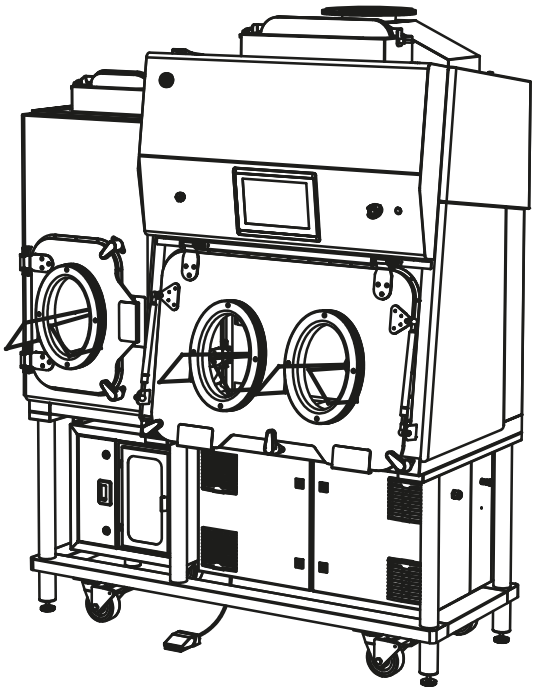

13. Process Chamber Air Inlet, Automatic Damper
14. Process Chamber Air Inlet Pre-Filter, M6
15. Process Chamber Supply Fan
16. Process Chamber Supply Filter, H14 HEPA Filter
17. LED Light
18. Glove Extender (Optional)
19. Isolator Power Supply
20. Supplementary Power Supply
21. Process Chamber Exhaust Fan
22. Hanging Rail with 12 Hooks (Optional)
23. Inner Glass Door with Static Seal
24. Process Chamber Exhaust Filter, HEPA Filter
25. Compressed Air Inlet Port
26. H_2O_2 Room Sensor (Inside The ICP) (Optional)
27. Pass Chamber Air Inlet Pre-Filter, G4
28. Pass Chamber Supply Fan
29. Pass Chamber Supply Filter, H14 HEPA Filter
30. Pass Chamber Air Inlet, Automatic Damper
31. BioVap Decon Nozzle (Optional)
32. Pass Chamber Exhaust Filter, H14 HEPA Filter
33. Instrumentation Control Panel (ICP)

CBI-T

Containment Barrier Isolator - Turbulence

Introduction

CBI-T utilizes turbulent airflow and facilitates the isolation of a product or process while providing the required condition for handling potent powder compounds.

In CBI-T, a supply filtered air is introduced into the chamber that mixes with and dilutes airborne contaminants, thus reducing the concentration within the environment. Most contaminants are ultimately removed from the environment through the air exhaust system. Contamination removal takes longer to achieve because the air turbulence keeps particles suspended and the dilution process is dependent on the volume of air cycling through the space.

Applications

- Potent Powder Handling
- HPAPI QC Testing
- Research and Development

Key Features

- Utilizes turbulent airflow for dilution of airborne compounds, thus reducing concentration in the environment
- Fully welded Stainless steel 316L internal chambers with Stainless steel 304 external housing
- Intuitive HMI controller supervises all functions and monitors airflow and pressures in real-time.
- Cost-effective solution for potent powder handling

Standard Compliance

- Air Quality: ISO Class 8 (BS EN ISO 14644-1)
- Class 2 Containment as per ISO 10648-2

CBI-T AIRFLOW PATTERN

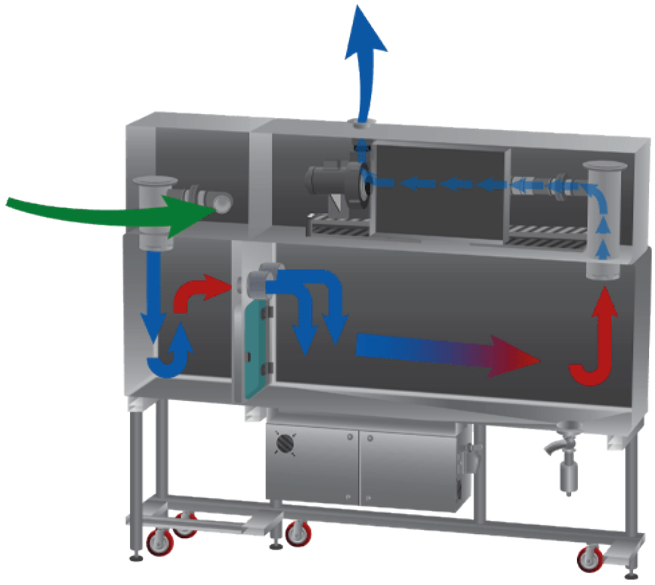

Ambient Air Filtered Air Potentially Contaminated Air

- Ambient air is pulled through the inlet prefilter located in front of the isolator chamber. This air movement creates a turbulent airflow in the pass-through chamber.
- Filtered air from the pass-through chamber is then pulled towards the cartridge filter in between chamber and transferred to the main chamber.
- This filtered air also creates a turbulent airflow in the main chamber.
- Air is then exhausted out in the top portion of the isolator after passing through double exhaust filtration. The high rate of airflow circulation helps to prolong filter life and reduces the chances of ambient contaminants entering the work zone. Exhausted air is replenished by ambient air coming from the inlet prefilter.

General Specifications Containment Barrier Isolator - Turbulence		CBI-T-2G	CBI-T-3G	CBI-T-4G
External dimension of Process Chamber *		1200 x 775 x 2375 mm	1600 x 775 x 2375 mm	2000 x 775 x 2375 mm
Internal dimension of Process Chamber		1196 x 635 x 850 mm	1596 x 635 x 850 mm	1996 x 635 x 850 mm
External dimension of 1-glove Pass Chamber		610 x 630 x 2325 mm		
Internal dimension of Pass chamber		606 x 524 x 850 mm		
Glove port height		1235 mm		
Glove port dimension		Circular (200 x 200 mm) Note: Oval (200 x 300 mm) is available as optional		
Chamber Environment		ISO Class 8 (Grade D in operation, Grade C at rest)		
Air Change per Hour		Minimum 20		
Chamber Pressure		Factory-Configured Negative Pressure		
Airflow Type		Turbulent Airflow Factory-Configured Single-Pass/Total Exhaust Model		
Filter Type - Chamber Inlet		HEPA (H14) Push Push Cartridge Filter		
Filter Efficiency - Chamber Inlet		> 99.995% at particles > 0.1-0.2 microns (MPPS)		
HMI Type		HMI Siemens/ Allen Bradley 7” Note: Industrial PC upgrade is available as optional		
Control System		Industrial Grade PLC Siemens/ Allen Bradley Note: Industrial PC upgrade is available as optional		
Lighting Level		≥ 500 Lux (6000 K)		
Sound Level		≤ 80 dBA		
Isolator Construction	Internal Chamber	SS316L		
	Service Housings	SS304		
	Support Frame	SS304		
	Control Panel	In-house SS304 (IP-20)		
	Chamber Door	10 mm (0.39”) Tempered Glass		
Isolator Surface Finish	Internal Chamber	≤ 0.4 Ra		
	External Chamber	≤ 0.6 Ra		
Electrical Requirement		220-240 VAC, 50/60 Hz, 1Ø or 110-120 VAC, 50/60 Hz, 1Ø Note: 3Ø is available upon request		
Compressed Air Requirement		Min 6 Bar-g, max 12 Bar-g with 50 Liter per Minute Flow		
Air Exhaust Requirement (for ducting facility)		3”		
Estimated Weight**		600 kg	700 kg	800 kg
Shipping Dimension (W x D x H)		TBD	TBD	TBD

* Including exhaust collar for ducting and fixed stand with caster wheels and leveling feet

** Typical weight with 1 PTC. Contact Esco for more details

Building Exhaust Requirement	CBI-T-2G	CBI-T-3G	CBI-T-4G
Total exhaust (Single Pass) with 1 PTC	29 cmh	41 cmh	36 cmh

Note: The values stated above are based on standard building exhaust requirements with a ±30% tolerance and may vary for customized dimensions or specific airflow configurations. Please contact Esco to confirm the exact building exhaust requirements for the proposed or selected configuration.

Engineering Drawing
Containment Barrier Isolator - Turbulence

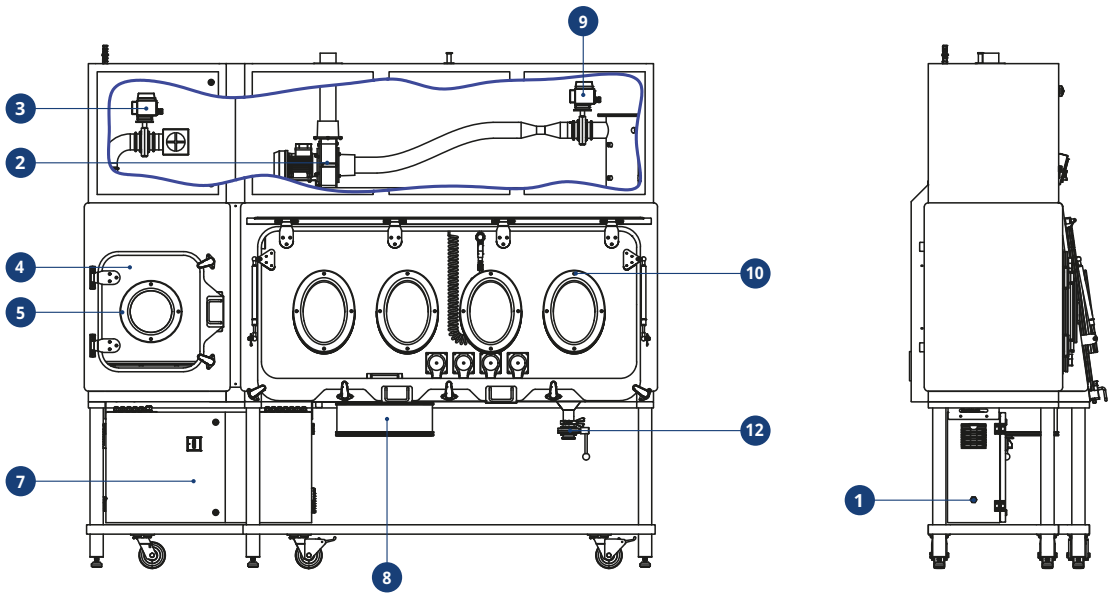

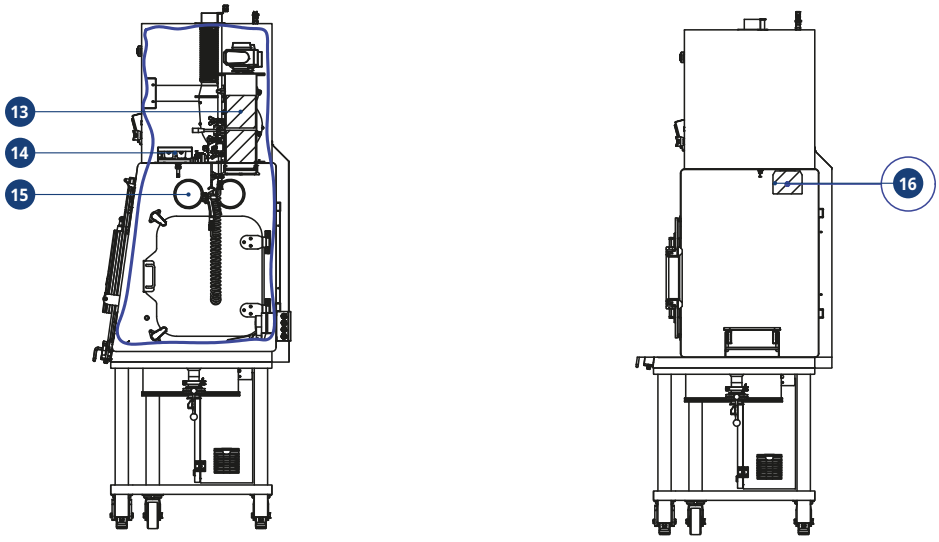

1. Isolator Incoming Power Supply
2. Exhaust Blower
3. Air Inlet With Electric Butterfly Valve
4. Pass Chamber Outer Glass Door With Static Seal
5. Pass Chamber Round Glove Port
6. Fixed Support Stand
7. Main Control Panel (MCP)
8. Continuous Liner System (Optional)
9. Air Exhaust With Electric Butterfly Valve
10. Process Chamber Oval Glove Port (Optional)*
11. Process Chamber Glass Door With Static Seal
12. 2” Manual Drain Valve (Optional)
13. Exhaust Push Push Filter, H14 Filter
14. LED Light
15. In Between Chamber Cartridge Filter, H14 Filter
16. Inlet Cartridge Filter, H14 Filter

***The standard glove ports for CBI are circular glove ports**

Engineering Drawing
Containment Barrier Isolator - Turbulence

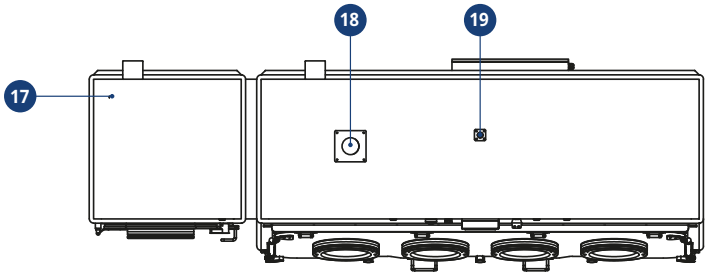

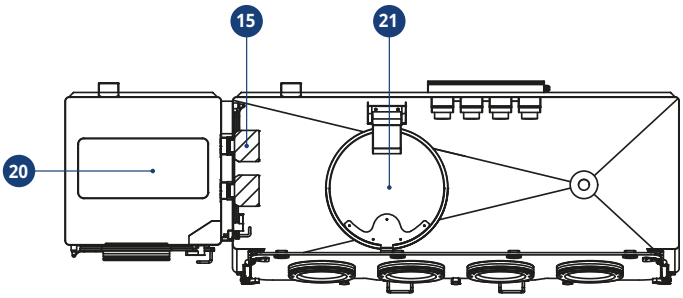

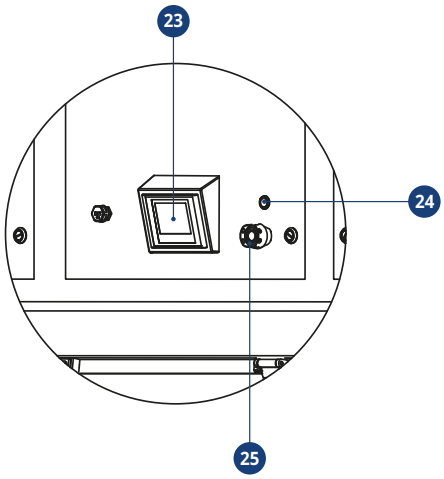

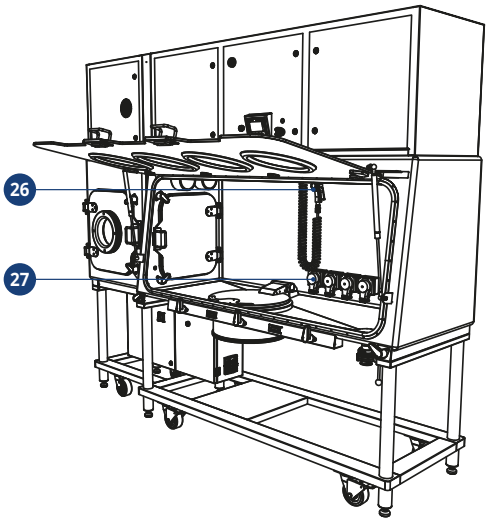

17. Compressed Air Inlet Port, Quick Connect Fitting, 10mm Tube
18. Air Exhaust With Ø3” Thimble Exhaust
19. Water For Injection (WFI), 1/2” Triclover Connection (Optional)
20. Pass Chamber Sliding Tray
21. PP Lid For Continuous Liner System
22. USB Port For HMI Servicing And Data Connection
23. HMI 7”, Siemens
24. Emergency Stop Reset Button
25. Emergency Stop Button
26. WIP, Water Spray Gun (Optional)
27. Electrical Outlet (IP-66 rated) (Optional)

CBI-III

Containment Barrier Isolator - Class III Biosafety Cabinet

Introduction

CBI-III offers the highest level of operator, product, and environmental protection from infectious/biohazardous aerosols and is suitable for microbiological work with agents assigned to biosafety levels 1,2,3, or 4. It is designed for an absolute level of containment, it is frequently used for work involving the deadliest biohazards, bacteria, viruses, and microorganisms.

CBI-III is configured to operate at a minimum of -125 Pa or -200 Pa (depending on the client's process) to provide adequate containment for handling highly pathogenic and lethal biological agents.

Applications

- Laboratory containment for handling biological agents of up to level 4
- Virus and vaccine production
- Research and development

Key Features

- Fully welded Stainless steel 316L internal chambers with Stainless steel 304 external housing
- Exhaust air is double-staged filtered through high-quality HEPA H14 filters (as per EN1822) with a typical efficiency of ≥ 99.995% for 0.1 to 0.3 micron particles.
- An integrated pass-through with interlocking doors permits materials transfer without risk of contamination
- Single-piece, leak-tested glove assemblies which guarantee maximum protection
- Extreme negative pressure for ultimate operator and environmental protection

Standard Compliance

- BS EN 12469
- Air Quality: ISO Class 5 (BS EN ISO 14644-1) and EC GMP Grade A
- H14 filters: HEPA as per EN 1822 and ULPA as per IEST-RP-CC001.3

CBI-III AIRFLOW PATTERN

- Ambient air is pulled through the inlet prefilter located on top of the isolator. Air from the top inlet and from work zone is pulled by the fan which creates a positive pressure on the plenum that creates downflow.
- The HEPA (H14) downflow filter creates a laminar and particle-free ISO Class 5 air cleanliness as per ISO 14644-1 inside the isolator chamber to protect the work material inside the main chamber and pass-through.
- Air from the work zone and pass-thru is quickly purged out by the fan to keep the area clean, while 100% of the air is exhausted out of the isolator, passing through double stage HEPA (H14) exhaust filter for a safe containment against biohazards. For enhancing operator and environmental safety, CBI-III should be connected to external ducting facility.

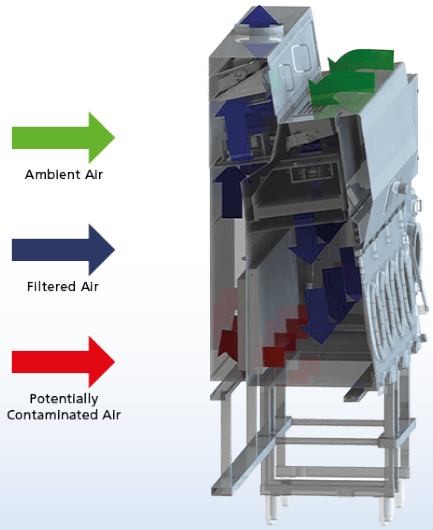

General Specifications Containment Barrier Isolator - III		CBI-III-2G	CBI-III-3G	CBI-III-4G
External dimension of Process Chamber*		1200 x 920 x 2650 mm	1600 x 920 x 2650 mm	2000 x 920 x 2650 mm
Internal dimension of Process Chamber		1196 x 560 x 765 mm	1596 x 560 x 765 mm	1996 x 560 x 765 mm
External dimension of 1-glove Pass Chamber		610 x 780 x 1325 mm		
Internal dimension of Pass chamber		606 x 450 x 700 mm		
Glove port height **		1135 mm		
Glove port dimension		Circular (200 x 200 mm) Note: Oval (200 x 300 mm) is available as optional		
Chamber Environment		ISO Class 5 in Process Chamber (Grade A)		
Chamber Pressure		Factory-Configured Negative Pressure, -125 Pa or -200 Pa with 20% tolerance		
Airflow Type		Unidirectional/ Laminar Airflow Factory-Configured Single-Pass Model		
Filter Type - Chamber Inlet		HEPA (H14) Filter with Integral Mesh Guard and Gasket Seal		
Filter Efficiency - Chamber Inlet		> 99.995% at Most Penetrating Particle Size (MPPS) as per EN 1822:2009		
HMI Type		HMI Siemens/ Allen Bradley 7” Note: Industrial PC upgrade is available as optional		
Control System		Industrial Grade PLC Siemens/ Allen Bradley		
Lighting Level		≥ 500 Lux (6000 K)		
Sound Level		≤ 80 dBA		
Isolator Construction	Internal Chamber	SS316L		
	Service Housings	SS304		
	Support Frame	SS304		
	Control Panel	In-house SS304 (IP-20)		
	Chamber Door	10 mm (0.39”) Tempered Glass		
Isolator Surface Finish	Internal Chamber	≤ 0.4 Ra		
	External Chamber	≤ 0.6 Ra		
Electrical Requirement		220-240 VAC, 50/60 Hz, 1Ø or 110-120 VAC, 50/60 Hz, 1Ø Note: 3Ø is available upon request		
Compressed Air Requirement		Min 6 Bar-g, max 12 Bar-g with 200 Liter per Minute Flow		
Exhaust Duct Requirements (by Client) unless Integral Catalytic Convertor is Included		250 mm (10”) Duct from Isolator to Outside		
Estimated Weight		850 kg	1000 kg	1200 kg
Shipping Dimension (W x D x H)		TBD	TBD	TBD

* Including exhaust collar for ducting and fixed stand with caster wheels and leveling feet

** With fixed stand with caster wheels and leveling feet

Building Exhaust Requirement	CBI-III-2G	CBI-III-3G	CBI-III-4G
Total exhaust (Single Pass) with 1 PTC	1000 cmh	1550 cmh	1800 cmh

Note: The values stated above are based on standard building exhaust requirements with a ±30% tolerance and may vary for customized dimensions or specific airflow configurations. Please contact Esco to confirm the exact building exhaust requirements for the proposed or selected configuration.

Engineering Drawing
Containment Barrier Isolator - Class III Biosafety Cabinet

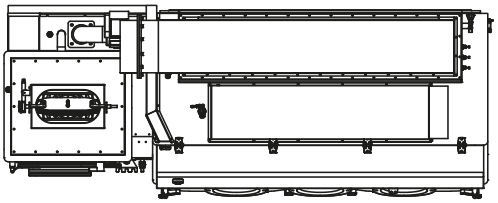

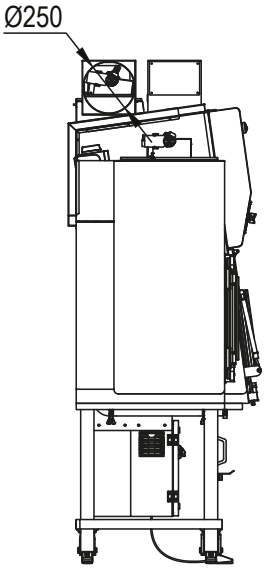

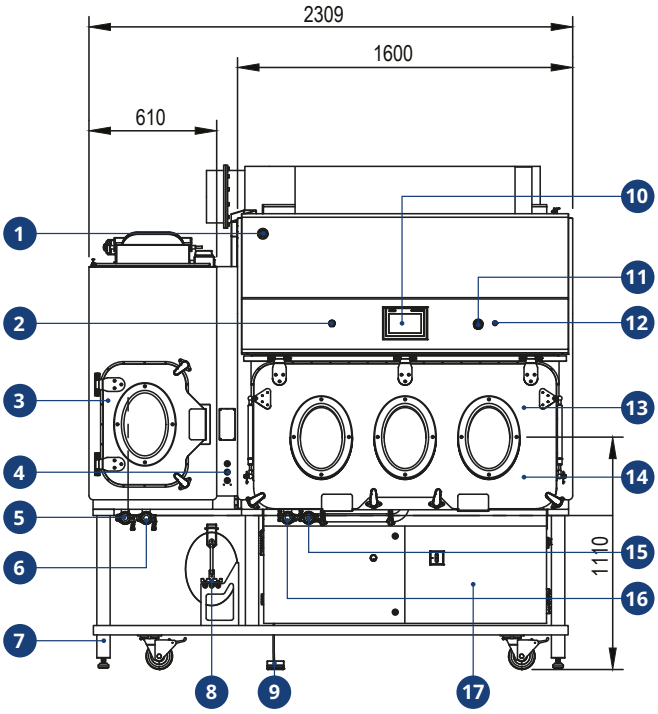

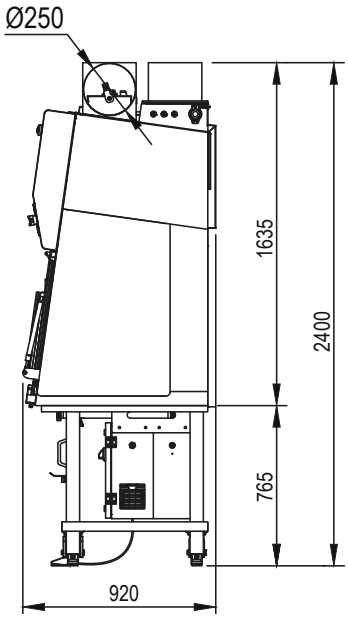

1. Visual & Audible Alarm Buzzer
2. USB Port for HMI Servicing and Data Connection
3. Pass Chamber Outer Glass Door with Static Seal
4. Ports for Glove Leak Tester
5. Pass Chamber VHP Outlet Port, Tri- Clamp Connection 1.5” (Optional)
6. Pass Chamber VHP inlet Port, Tri-Clamp Connection 1.5” (Optional)
7. Fixed Stand
8. Integrated Glove Leak Tester (Optional)
9. Foot switch for Inner Door
10. HMI 7”, Siemens
11. Emergency Stop Button
12. Emergency Stop Reset Button
13. Oval Glove Ports (Optional)*
14. Process Chamber Main Glass Door with Static Seal
15. Process Chamber VHP Outlet Port, Tri- Clamp Connection 1.5” (Optional)
16. Process Chamber VHP Inlet Port, Tri- Clamp Connection 1.5” (Optional)
17. Main Control Panel (MCP)

*** The standard glove ports for CBI are circular glove ports**

Engineering Drawing
Containment Barrier Isolator - Class III Biosafety Cabinet

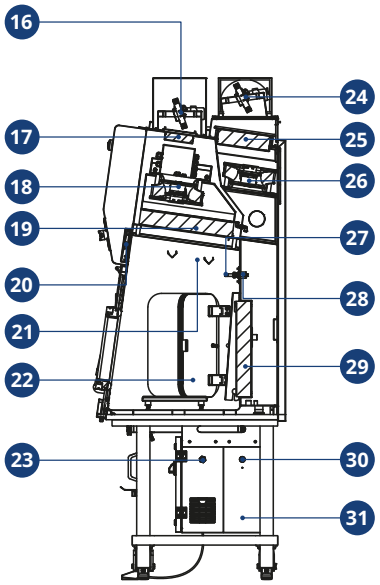

SECTION D-D

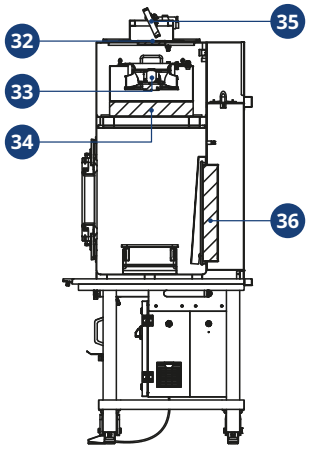

SECTION E-E

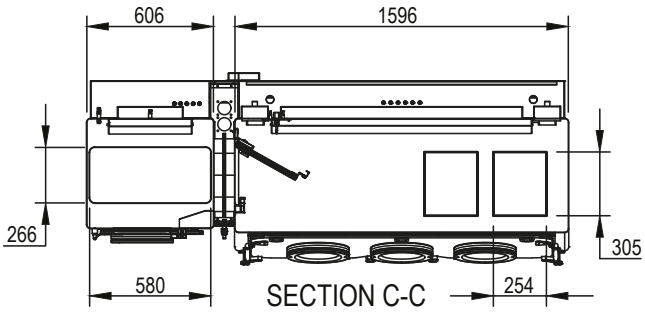

SECTION C-C

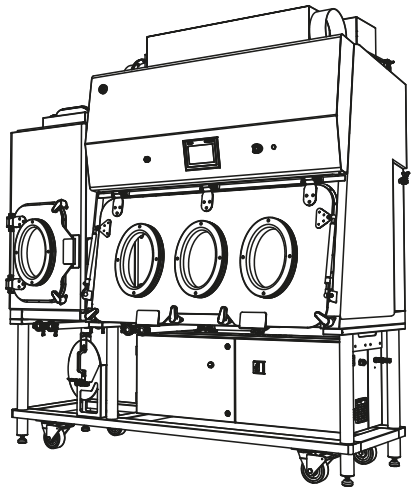

16. Process Chamber Air Inlet, Automatic Damper
17. Process Chamber Air Inlet Pre-Filter, M6
18. Process Chamber Supply Fan
19. Process Chamber Supply Filter, H14 HEPA Filter
20. LED Light
21. Hanging Rail with 12 Hooks (Optional)
22. Acrylic Inner Door with Inflatable Seal
23. Power Supply
24. Process Chamber Air Exhaust, Automatic Damper
25. Process Chamber 2nd Stage Exhaust Filter, H14 HEPA Filter
26. Process Chamber Exhaust Fan
27. RH and Temperature Sensor Probe
28. Air Flow Sensor
29. Process Chamber 1st Stage Exhaust Filter, H14 HEPA Filter
30. Compressed Air Inlet Port
31. Instrumentation Control Panel (ICP)
32. Pass Chamber Air Inlet Pre-Filter, G4
33. Pass Chamber Supply Fan
34. Pass Chamber Supply Filter, H14 HEPA Filter
35. Pass Chamber Air Inlet, Automatic Damper
36. Pass Chamber Exhaust Filter, H14 HEPA Filter

List of Options for CBI Models		CBI-U	CBI-T	CBI-III
4" Split Butterfly Valve (for powder discharge of powder below isolator chamber)		✓	✓	✓
Raised and Lower Height Adjustable Support Stand		✓	✓	✓
Anti-blow Back Damper Box		✓		✓
Automated Pressure Hold Test	With Client-supplied Compressed Air	✓	✓	✓
	With Mobile Air Compressor (Esco-supplied)	✓	✓	✓
Bag Welder with Table Bag-out Port		✓	✓	✓
Mobile Biodecontamination BioVap		✓		✓
Integrated Biodecontamination BioVap		✓		✓
Carbon Filter		✓	✓	✓
Integration of Small Scale Aseptic or Potent Tablet/Capsule		✓	✓	✓
Double-sided Access			✓	
Manual Drain Valve		✓	✓	✓
Electrical Outlet	IP-66	✓	✓	✓
	IP-54	✓	✓	✓
	Non-IP rated	✓	✓	✓
ATEX rating up to zone 1/21 internally only			✓	
Glove Leak Tester	Integrated	✓	✓	✓
	Wireless	✓	✓	✓
H2O2 Monitoring System (integrated to HMI/PLC)		✓		✓
Entry / Exit Ports	Liquid/ Water Waste	✓		✓
	Product Waste	✓	✓	✓
N2 Purge for Process Chamber			✓	
Product Waste Bag Out Ports		✓	✓	✓
Particle Counter Integration		✓		✓
Air Sampler Integration		✓		✓
RTPØ 105, 190, 270 - Alpha		✓	✓	✓
RTPØ 105, 190, 270 - Beta Canister		✓	✓	✓
RTPØ 105, 190, 270 - Beta Liner		✓	✓	✓
RTPØ 350 - Alpha, Beta Liner, Beta Canister		✓	✓	✓
Spray Ball (CIP) with Manual Ball Valve			✓	
Spray Gun (WIP) with Manual Ball Valve			✓	
Sterility Test Pump	Tabletop	✓		
	Integrated	✓		
Temperature and Relative Humidity Monitoring (only for process chamber)		✓	✓	✓
Rear View Monitor		✓	✓	✓
UV Lamp		✓		✓
Weighing Scale Granite Slab with SS316L Frame and Leveling Feet		✓	✓	✓

BioVap™ | Biodecontamination System

Esco BioVap™ is an effective hydrogen peroxide based biodecontamination system capable of achieving a 6-log reduction in bioburden. The spore log reduction has been validated using biological indicator stainless steel ribbons populated with *Geobacillus Stearothermophilus* spores.

BioVap™ has been developed in response to increasing demands from the pharmaceutical, biotech, pharmacy, veterinary, and other related industries for microbial-free environments and more stringent decontamination requirements. Hydrogen peroxide breaks down into oxygen and water on completion of the sterilization process which makes it one of the most environment-friendly decontaminants available. The BioVap™ is developed for performing bio-decontamination of aseptic barrier systems, pass-through systems, and Esco isolators.

Industries Served

- Hospital
- Food, Beverages & Confectionary
- Manufacturing Facilities
- Veterinary Surgeries
- Dentist
- Pharmaceutical
- Primary Healthcare Facilities

Science Behind the Process

Esco BioVap™ decontamination leverages the strong oxidizing properties of hydrogen peroxide, which, in vapor or atomized form, can effectively reach complex surfaces on any equipment. The process involves generating vaporized/atomized H_2O_2, distributing it evenly in a sealed space, and allowing it to dwell, during which reactive oxygen species (ROS) such as hydroxyl radicals cause oxidative damage to cellular proteins, lipids, and nucleic acids, effectively killing a broad spectrum of microorganisms, including bacteria, viruses, fungi, and spores.

The H_2O_2 is safely removed through aeration, breaking down into water and oxygen, making BioVap a highly effective and material-compatible sterilization method with the necessary safety protocols to handle its toxicity to humans. The Esco BioVap™ system comes with two systems that the client can choose depending on the requirement:

Esco BioVapTM Generation 1 (Gen 1) – Atomized Hydrogen Peroxide (AHP)

Esco BioVap™ Generation 1 (Gen 1) utilizes atomized hydrogen peroxide sterilant creating a dry fog as it is injected into the space. This system creates a charge on the atomized droplets as they pass through the ultrasonic nozzle.

This charge imparted on the droplets of sterilant creates two important synergies:

- Each droplet of the sterilant contains billions of reactive molecules to execute the microbial kill.
- Through mutual repulsion, the droplets repel each other and distribute quickly through the space achieving a superior distribution of the sterilant. The charged droplets are attracted to the uncharged surfaces within the space so on impact the droplets burst and immediately start the sterilization process.

This revolutionary bio-decontamination system is not affected by temperature or relative humidity therefore there is no requirement to precondition the space being bio-decontaminated and therefore leads to a reduced cycle.

Priming	Injection	Dwell	Aeration

Esco BioVapTM Generation 2 (Gen 2) – Vaporized Hydrogen Peroxide (VHP)

Esco BioVap™ Generation 2 (Gen 2) utilizes vaporized hydrogen peroxide sterilant, creating a vapor that is evenly dispersed into the space. This advanced system vaporizes hydrogen peroxide, allowing it to permeate the environment thoroughly. The vaporized form of hydrogen peroxide exhibits two key advantages:

- The vapor phase allows for deeper penetration into porous materials and complex geometries, ensuring thorough decontamination even in difficult-to-reach areas.
- The controlled vaporization process maintains a consistent concentration of hydrogen peroxide throughout the entire space, resulting in a uniform and highly effective sterilization. This consistency minimizes the risk of under-dosing and ensures reliable microbial kill rates across all treated surfaces.

Dehumidification	Injection	Dwell	Aeration

Level of Biodecontamination

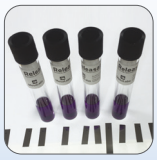

SANITIZATION
Two log-10^{-2}

DISINFECTION
Five log-10^{-5}

STERILIZATION
Six log-10^{-6}

Process Step

The BioVap™ system bio-decontamination cycle will have the following phases

- Injection Phase – In this phase, the sterilant is injected into the space as a dry fog at a pre-set pressure and flow rate and at a given period of time. During this period, the atomising pressure injection airflow and injection air pressure are monitored.
- Dwell Phase – During this phase, the sterilant is allowed to settle on the surfaces inside the enclosure for a set period of time.
- Aeration Phase – In this phase, the hydrogen peroxide sterilant is removed from the space/enclosure.

Flexibility Features

Esco Pharma BioVap™ system is developed to be flexible enough to work in all areas, from Esco isolators and transfer hatches. Keeping in mind that every customer and facility has different requirements.

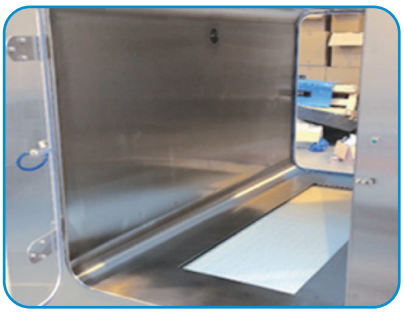

Esco Pharma Transfer Hatch and BioVap™ integrated system

Esco Pharma BioVap™ system integrated into the isolator as our approach to a cost-effective bio-decontamination

BioVap™ Gen 1 utilizes an ultrasonic nozzle to breakdown hydrogen peroxide droplets to a fine mist provide excellent distribution inside the decontamination chamber

Controls

The BioVap™ system is PLC controlled with an operator interface via a touch screen HMI terminal giving operator log-on security and real-time display of cycle parameters. Cycle parameters are also recorded, and a printout of the cycle parameters is given at the end of a cycle for validation records. Electronic data recording of the cycles 21 CFR 11 compliant is available on request.

At least 10 pre-programmed cycles can be saved on the PLC system selectable from the interface terminal. The BioVap™ can be controlled locally via the HMI located on the BioVap™ generator or can be controlled remotely from an Isolator or Transfer Hatch control system.

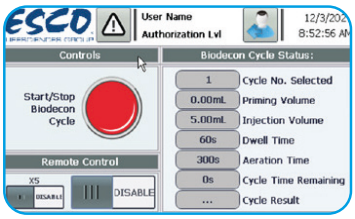

HMI Controller

BioVap™

Esco Micro Pte Ltd
19 Changi South Street 1, Singapore 486779
Tel: +65 65420833
Email: mail@escolifesciences.com

Esco Technologies, Inc.
2512 Metropolitan Drive, Suite 120 B
Feasterville- Trevose, PA 19053-6738
Tel: +1 215 322 2155
Email: eti.pharma@escolifesciences.com

Esco GB Ltd
Unit 2 R-evolution @ Gateway 36, Kestrel Way, Barnsley, S70 5SZ
Tel: +44 (0) 1226 360 799
Email: egb.info@escolifesciences.com

Esco Lifesciences Offices: Bangladesh | China | Denmark | Germany | Hong Kong | India | Indonesia | Italy | Japan | Lithuania | Malaysia | Myanmar | Philippines | Russia | Singapore | South Africa | South Korea | Taiwan | Thailand | UAE | UK | USA | Vietnam

CBI Brochure_A4_v0_09242026

Esco can accept no responsibility for possible errors in catalogues, brochures, and other printed materials. Esco reserves the right to alter its products and specifications without notice. All trademarks and logotypes in this material are the property of Esco and the respective companies.